| DRAWING REVISIONS | | | | |
|---|---|---|---|---|
| REV | S/N | DESCRIPTION | APPROVED | DATE |
| A | 20151109-03 | ORIGINAL RELEASE | | |

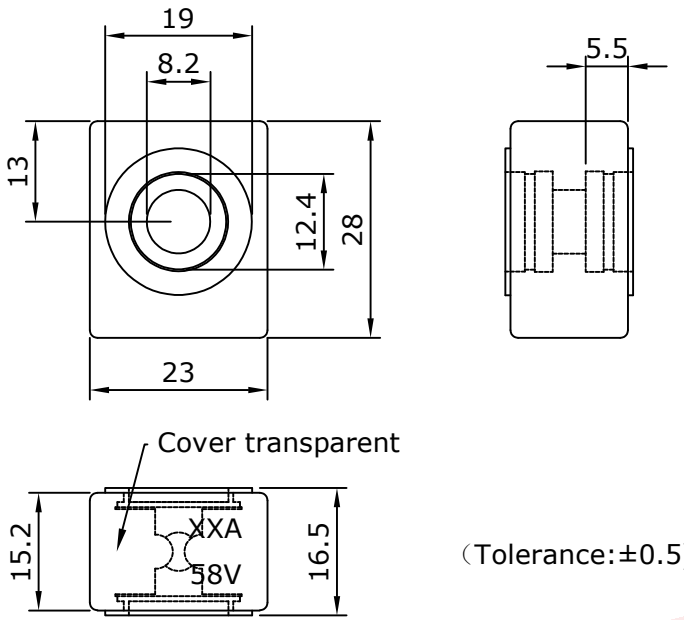


(Tolerance:±0.5)

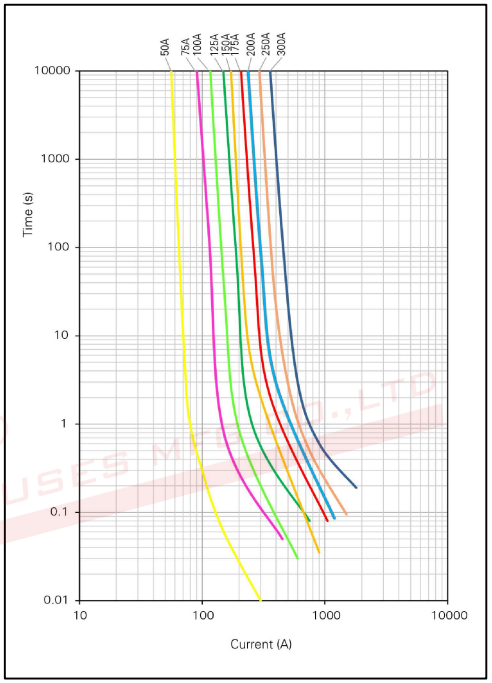


## Description

1. Compact, high-amp fuse-appropriate for DC Main, inverter, windlass, and bow thruster circuit protection.
2. Provides high current protection in tight space constraints.
3. Functional Characteristics

| TESTING CURRENT | BLOW TIME LIMIT |
|---|---|
| 100% | 100Hr. Min |
| 135% | 1Hr. Max |
| 150% | 1sec-600sec |
| 200% | 0.2sec-60sec |
| 300% | 0.05sec -1.5sec |

4. Standard: ISO8820-6; DIN 72581-5.
5. Volt: 58V DC; Interrupting Rating: 2000A@58Vdc.

| Assembly P/N | MRBF-B-50A | MRBF-B-75A | MRBF-B-100A | MRBF-B-125A | MRBF-B-150A |
|---|---|---|---|---|---|
| Voltage rating | 58V | 58V | 58V | 58V | 58V |
| RATING | 50A | 75A | 100A | 125A | 150A |

| Assembly P/N | MRBF-B-175A | MRBF-B-200A | MRBF-B-250A | MRBF-B-275A | MRBF-B-300A |
|---|---|---|---|---|---|
| Voltage rating | 58V | 58V | 58V | 58V | 58V |
| RATING | 175A | 200A | 250A | *275A | 300A |

| ITEM | P/N | DESCRIPTION | QTY | Material | REMARKS |
|---|---|---|---|---|---|
| 3 | BL-MRBF | Cover | 1 | PC | Nuture |
| 2 | CT-MRBF | Contact | 1 | Brass | Tin plated |
| 1 | PB-MRBF | Base | 1 | Ceramic | White |

东莞市赛力特保险丝制造有限公司
DONGGUAN SELITTEL FUSES MFG CO., LTD

| UNLESS OTHERWISE STATED | | | | | | | |
|---|---|---|---|---|---|---|---|
| WALL THICKNESS | | MM | Marine-Rated Battery Terminal Fuse | | | | CUSTOMER |
| LINEAR | .XX | ±0.15 MM | | | | | |
| | .XXX | ±0.05 MM | DSGN | Tommy | 2015-11-09 | SCALE | free |
| ANGULAR | | ±0.5 DEG | DFTS | Owen | 2015-11-09 | SHEET | 1 OF 1 |
| DRAFT ANGLE/SIDE | | 0.5 °MAX | | | | | |
| BURR & FLASH | | 0.10 MAX | CHKD | | | PART NO. | REV |
| BREAK CORNERS | | 0.20 R.MAX | | | | MRBF-B | A |
| PARTING LINE MISMATCH | | 0.05 MAX | APPD | | | | |

SELITTEL FUSES MFG CO., LTD