ALL INFORMATION CONTAINED OR DISCLOSED BY THIS DOCUMENT IS CONSIDERED CONFIDENTIAL AND PROPRIETARY BY ANDU ELECTRONICS CO,LTD. ALL DESIGN, MANUFACTURING, USE, REPRODUCTION, AND ALL SALES RIGHTS, ARE EXPRESSLY RESERVED BY AND TO ANDU ELECTRONICS CO,LTD. AND COMMUNICATION OF THIS INFORMATION TO OTHERS IS PROHIBITED WITHOUT THE PRIOR WRITTEN CONSENT OF Sellifuse

DRAWING REVISIONS

REV	S/N	DESCRIPTION	APPROVED	DATE
A	20091210-011	ORIGINAL RELEASE		

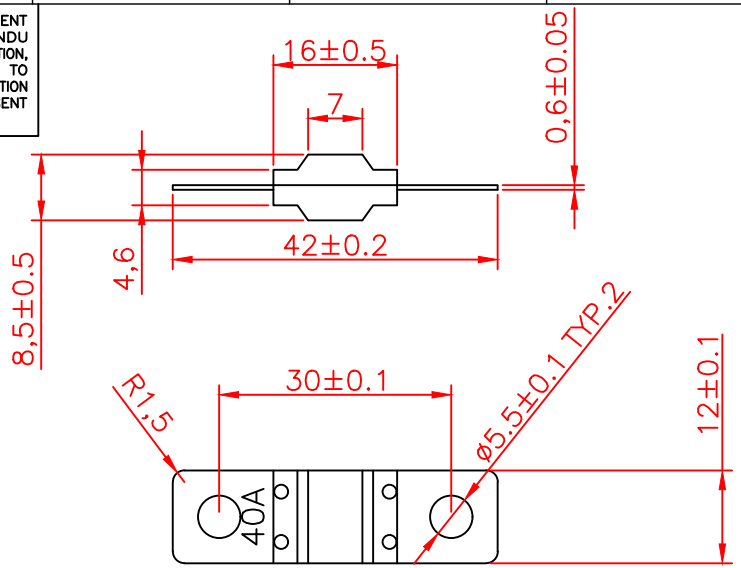

NOTES: UNLESS OTHERWISE SPECIFIED.

1. the fuses shown are for in motor vehicles, boats and trailers to protect electrical wiring and vehicles.This standard is for the construction shown and is not intended to restrict the design and use of other configurations and materials capable of meeting the vehicle requirements.
2. A fuse is a device designed to interrupt the electrical circuiut when subjected to overcents. This action is to be nonreversible and the fuse is intended to be replaced after the circuit, malfunction has been corrected.
   capable of meeting the vehicle requirements.
3. Functional Characteristics

TESTING CURRENT	BLOW TIME LIMIT
100%	100Hr. minimum
110%	4Hr. minimum
150%	90seconds–3600seconds
200%	5seconds –100seconds
300%	0.5sec–15sec

4. Standard: ISO8820–5; UL248;

ITEM	Voltage rating	RATING	ASSEMBLY P/N
9	32V	150A	ANS-S-150
8	32V	125A	ANS-S-125
7	32V	100A	ANS-S-100
6	32V	80A	ANS-S-80
5	32V	70A	ANS-S-70
4	32V	60A	ANS-S-60
3	32V	50A	ANS-S-50
2	32V	40A	ANS-S-40
1	32V	30A	ANS-S-30

ITEM	P/N	DESCRIPTION	QTY	Material	REMARKS
3	PB-4210-N	PLASTIC COVER	1	PC	Transparent 94-V0
2	TC-4210-N	TERMINAL CONTACT	1	Zn Alloy	Ni plated
1	PB-4210-N	PLASTIC BASE	1	PBT	Black 94-V0

东莞市赛力特保险丝制造有限公司
DONGGUAN SELITTEL FUSE MFG CO., LTD

UNLESS OTHERWISE STATED		
WALL THICKNESS		MM
LINEAR	.XX	±0.15 MM
	.XXX	±0.05 MM
ANGULAR		±0.5 DEG
DRAFT ANGLE/SIDE		0.5 ° MAX
BURR & FLASH		0.10 MAX
BREAK CORNERS		0.20 R. MAX
PARTING LINE MISMATCH		0.05 MAX

ANS bolt-on Fuse

CUSTOMER

DSGN	Tommy	07-12-09	SCALE	free
DFTS	Tommy	07-12-09	SHEET	1 OF 1
CHKD			PART NO.	REV
APPD			ANS-S	A