ALL INFORMATION CONTAINED OR DISCLOSED BY THIS DOCUMENT IS CONSIDERED CONFIDENTIAL AND PROPRIETARY BY ANDU ELECTRONICS CO,LTD. ALL DESIGN, MANUFACTURING, USE, REPRODUCTION, AND ALL SALES RIGHTS, ARE EXPRESSLY RESERVED BY AND TO ANDU ELECTRONICS CO,LTD. AND COMMUNICATION OF THIS INFORMATION TO OTHERS IS PROHIBITED WITHOUT THE PRIOR WRITTEN CONSENT OF ANDU ELECTRONICS CO,LTD.

DRAWING REVISIONS

REV	S/N	DESCRIPTION	APPROVED	DATE
A	20071216-10	ORIGINAL RELEASE		

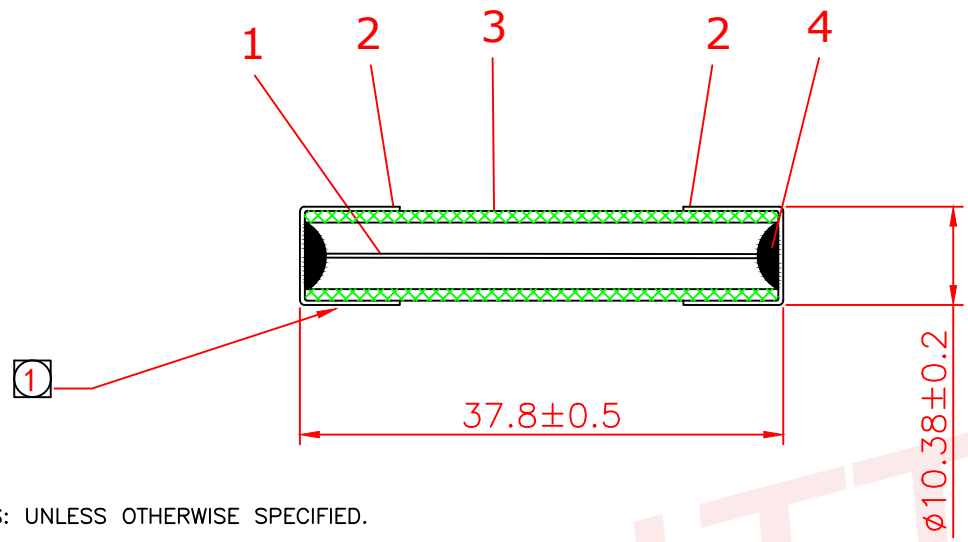

NOTES: UNLESS OTHERWISE SPECIFIED.

1. PUNCH HERE,"5AG I A".
2. Volt: 32V DC
3. Functional Characteristics

TESTING CURRENT	BLOW TIME LIMIT
100% (35A–100A)	4hours minimum
110% (10A–30A)	4hours minimum
135% (10A–30A)	1hours Maximum
200% (10A–30A)	5sec Maximum
350% (35A–100A)	4sec Maximum

4. Standard: SAE J554;

ITEM	RATING	ASSEMBLY P/N
12	100A	AGU-100
11	80A	AGU-80
10	70A	AGU-70
9	60A	AGU-60
8	50A	AGU-50
7	40A	AGU-40
6	35A	AGU-35
5	30A	AGU-30
4	25A	AGU-25
3	20A	AGU-20
2	15A	AGU-15
1	10A	AGU-10

东莞市赛力特保险丝制造有限公司
SELITTEL FUSES MFG CO。, LTD

ITEM	P/N	DESCRIPTION	QTY	Material	REMARKS
4		Tin	N/A		
3	GT-6332-1	Glass TUBE	1		
2	EC-6332-1	ENDCAP	2	Brass with Au Plated	
1		MELTINGELEMENT	1	Zn Ally	

RoHS COMPLIANT

UNLESS OTHERWISE STATED

WALL THICKNESS		MM
LINEAR	.XX	±0.15 MM
	.XXX	±0.05 MM
ANGULAR		±0.5 DEG
DRAFT ANGLE/SIDE		0.5 °MAX
BURR & FLASH		0.10 MAX
BREAK CORNERS		0.20 R.MAX
PARTING LINE MISMATCH		0.05 MAX

minature fuse-link 10X38

FOR AGU

DSGN	Tommy Qiu	07-12-08	SCALE	free
DFTS	Tommy Qiu	07-12-08	SHEET	1 OF 1
CHKD			PART NO.	See above list
APPD			REV	A